DRAFT

Planning Policy Manual – Part 2

Planning Policies and Design Guidelines for Normalised Redevelopment Areas

Section 2.5
East Perth – Area 5
Jewell Lane

NOTE: Proposed Amendments Are Shown In Red – pg. 5

Version #	Decision Reference	Synopsis
1	11 March 2008	Adopted
2	18 March 2015	Amended
3	11 April 2017	Amended
4	To be inserted	Amended

CONTENTS

SECTION	TITLE	PAGE
1.0	APPLICATION	3
2.0	RELATIONSHIP TO PLANNING SCHEME AND PLANNING POLICIES	3
3.0	ABOUT THESE GUIDELINES	3
4.0	DEVELOPMENT POTENTIAL	3
5.0	SETBACKS	4
6.0	BUILDING HEIGHT	5
7.0	BUILDING DESIGN	8
7.1	Sloping Sites	8
7.2	Floor levels	8
7.3	Privacy	8
7.4	Balconies	9
7.5	Roof Form	9
7.6	Articulation, Detailing and Street Presence	9
7.7	Windows	10
7.8	Chimneys	10
7.9	Balustrades	10
7.10	Blank Walls	10
8.0	ACCESS AND PARKING	10
9.0	OPEN SPACE	11
10.0	MATERIALS AND COLOURS	11
10.1	Walls and Windows	11
10.2	Colour	11
10.3	Roofs and Shade Structure Covering	12
11.0	FENCES AND RETAINING WALLS	12
12.0	LANDSCAPE	15
13.0	SERVICES	15
14.0	GEOTECHNICAL SITE CONDITIONS	15

1.0 APPLICATION

The Belvidere subdivision is within the Belvidere Precinct (EP 8), as defined in the City of Perth Local Planning Scheme No. 26 (Normalised Redevelopment Areas) (herein called 'the Scheme'). These Guidelines apply to Lots 1 to 23 and 26 to 33 inclusive as shown in Figure 1.

2.0 RELATIONSHIP TO PLANNING SCHEME AND PLANNING POLICIES

These Design Guidelines are intended to supplement the provisions of the Scheme Text and Planning Policies and should be read in conjunction with the Scheme, in particular those provisions relating to the Claisebrook Village Project Area and Precinct EP8: Belvidere, and other Planning Policies.

The Deemed Provisions set out in the *Planning and Development (Local Planning Schemes) Regulations 2015* also form part of the Scheme Text.

The Scheme identified Preferred, Contemplated and Prohibited uses for Precinct EP8: Belvidere and stipulates maximum plot ratio. In determining any application for development approval the local government will have regard to these Design Guidelines, the Scheme and other Planning Policies.

3.0 ABOUT THESE GUIDELINES

These guidelines describe the character sought for this area and the design elements required to achieve the required character and form. Although detailed, they allow a considerable amount of design freedom. It should be noted that whilst variations to some elements may be considered, the local government may refuse Development Approval for developments not considered to be in keeping with the intent of these Guidelines. Variations to building heights and setbacks and building envelopes will not be contemplated.

4.0 DEVELOPMENT POTENTIAL

Lots 1 to 23 and 27 to 33

One dwelling per lot.

Lot 26

Two dwellings.

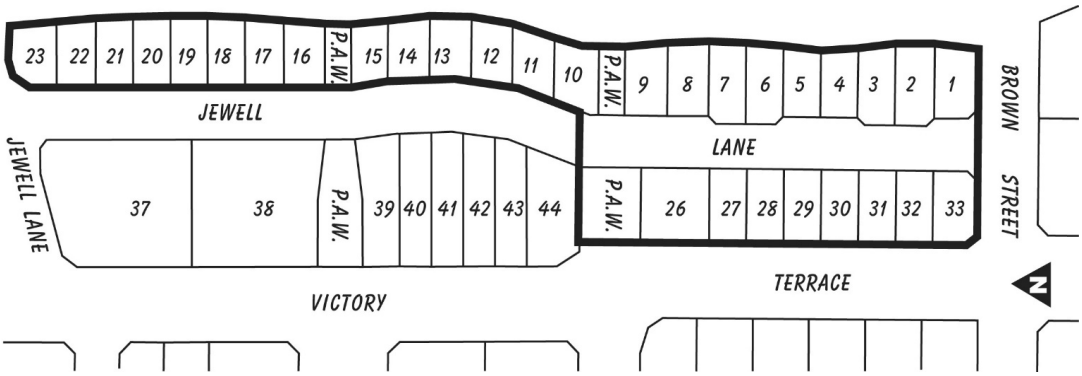

Figure 1 - Lots 1 to 23 Jewell Lane, Lots 26 to 33 Victory Terrace and Lots 37 to 44 Victory Terrace (Lots 37 to 44 Victory Terrace subject of separate Design Guidelines).

5.0 SETBACKS

Setbacks are measured at right angles from the relevant boundary to the closest section of wall. Required setbacks are as follows:

BOUNDARY	MIN	MAX
Lot 1		
North	Nil	Nil
Brown Street	1m (See Note 1)	4m
Mardalup Park	4m	4m (See Note 4)
Jewell Lane	3m (See Note 2)	n/a
Lots 2 to 8, 11 to 14 and 17 to 22		
Jewell Lane	3m (See Note 2)	n/a
Side	Nil	See Note 3
Mardalup Park	4m	4m (See Note 4)
Lots 9 and 15		
P. A. W.	1m (See Note 1)	4m
South	Nil	Nil
Mardalup Park	4m	4m (See Note 4)
Jewell Lane	3m (See Note 2)	n/a
Lots 10 and 16		
P. A.W.	1m (See Note 1)	4m
North	Nil	Nil
Mardalup Park	4m	4m (See Note 4)
Jewell Lane	3m (See Note 2)	n/a
Lot 23		
North	1m (See Note 1)	4m
South	Nil	Nil
Mardalup Park	4m	4m (See Note 4)
Jewell Lane	3m (See Note 2)	n/a
Lot 26		
P. A.W.	1m (See Note 1)	4m
South	Nil	Nil
Jewell Lane	3m (See Note 2)	n/a
Victory Terrace	3m	4m
Lots 27 to 32		
Side	Nil	See Note 3
Jewell Lane	3m (See Note 2)	n/a
Victory Terrace	3m	4m
Lot 33		
North	Nil	Nil
Brown Street	1m (See Note 1)	4m
Jewell Lane	3m (See Note 2)	n/a

Please see notes overleaf

Note 1: For Lots 1, 9, 10, 15, 16, 23, 26 and 33, one section of dwelling not less than 4m or more than 6m long must be set back 1m from this boundary. The balance of the dwelling must be set back at least 2m.

Note 2: A single storey garage or carport may be constructed with a nil setback to a maximum width of 6m however parking must not dominate the street elevation.

Note 3: Maximum nil setback is required for northern boundaries of Lots 2, 4, 6, 8, 12, 14, 18, 20, 22, 27, 29 and 31. Maximum nil setback is required for southern boundaries of Lots 3, 5, 7, 11, 13, 17, 19, 21, 26, 28, 30 and 32. Figure 1 refers. Other side boundaries for these lots may be set back but if set back, not less than one third of the total depth of the dwelling must be set back 1m. This is to ensure visual consistency of dwelling spacing. Setbacks between 0m to 1m are not permitted.

Note 4: Setback may be increased to 5m if a 2m deep balcony is provided. Refer to "Building Design" sub-section on Balconies.

6.0 BUILDING HEIGHT

- The building height and bulk is to be contained within a building envelope, with only minor projections allowed for such items as chimneys, finials, pergolas, small portions of bay and dormer windows, Juliette balconies and minor portions of other balconies, and approved features which in the opinion of the local government contribute to the character and identity of the area. Balconies and enclosed rooms must not project past the lot boundaries. The building envelope defines the limits of building bulk and it is not intended that the building profile should mirror that of the envelope.
- The maximum envelope height is measured from the highest finished level of the street or existing retaining wall (as the case may be) at the perimeter of the lot.
- Generally building heights are intended to be two to three storeys (min 6m, max 9m) plus usable roof space, (3m) in the form of a loft, attic or roof terrace. A minimum of two storeys (or equivalent 6m height) is required.
- Building envelopes are depicted in Figures 2 to 6, as follows:
  - Figure 2: Lots 2 to 8, 11 to 14 and 17 to 22
  - Figure 3: Lots 1, 9, 10, 15, 16 and 23
  - Figure 4: Lots 27 to 32
  - Figure 5: Lot 26
  - Figure 6: Lot 33
- Where the heights specified in this Policy are inconsistent with the heights specified in Special Control Area No. 33 – Royal Perth Hospital Flight Path Protection under City Planning Scheme No. 2, whichever are the lower heights shall apply.
- Allowances should be made for the slight variations in lot shape between lots when reading these diagrams. If a boundary is comprised of more than one section (i.e. there is an angle in the boundary) then the building envelope will have a corresponding number of sections on that boundary.

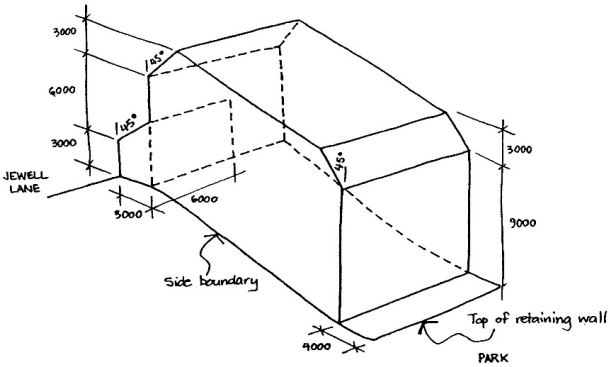

Figure 2 - Building Envelope for Lots 3, 5, 7, 11, 13, 17, 19 & 21.

This envelope is mirrored for Lots 2, 4, 6, 8, 12, 14, 18, 20 & 22.

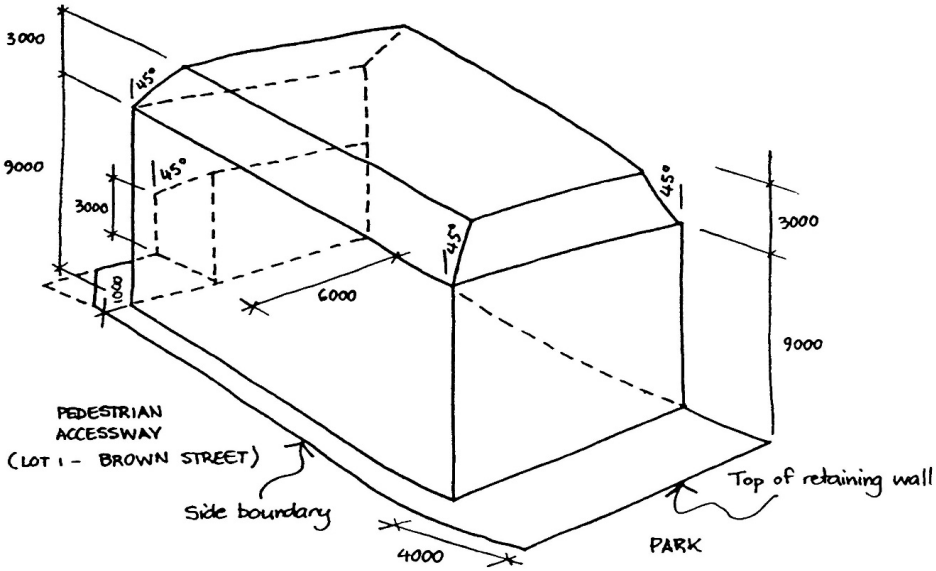

Figure 3 - Building Envelope for Lots 1, 10 & 16. This envelope is mirrored for Lots 9, 15 & 23.

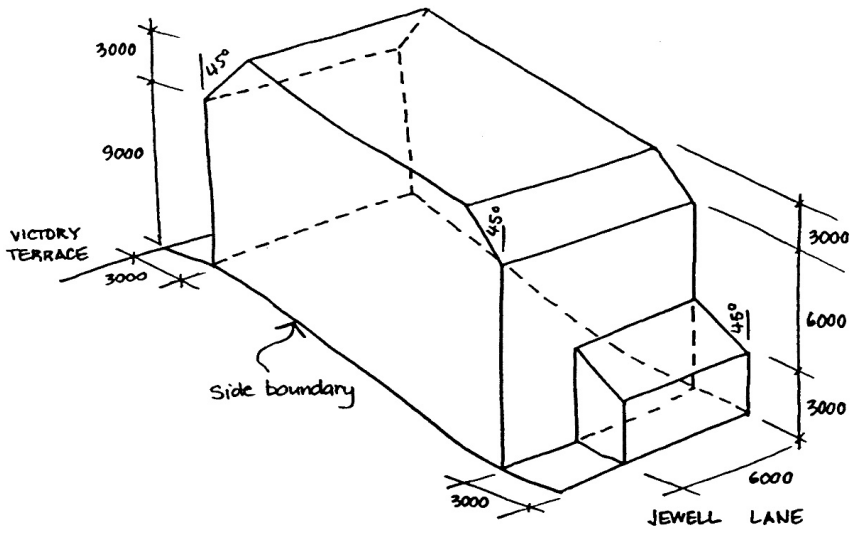

Figure 4 - Building Envelope for Lots 27, 29 and 31. This envelope is mirrored for Lots 28, 30 & 32.

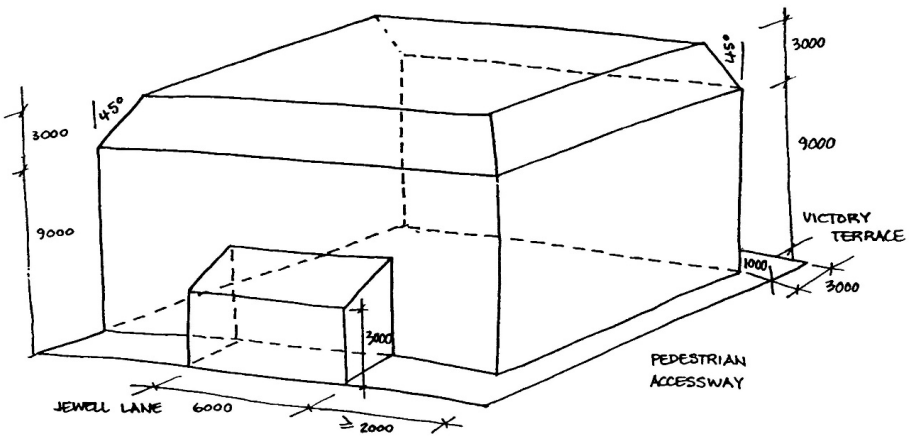

Figure 5 - Building Envelope for Lot 26.

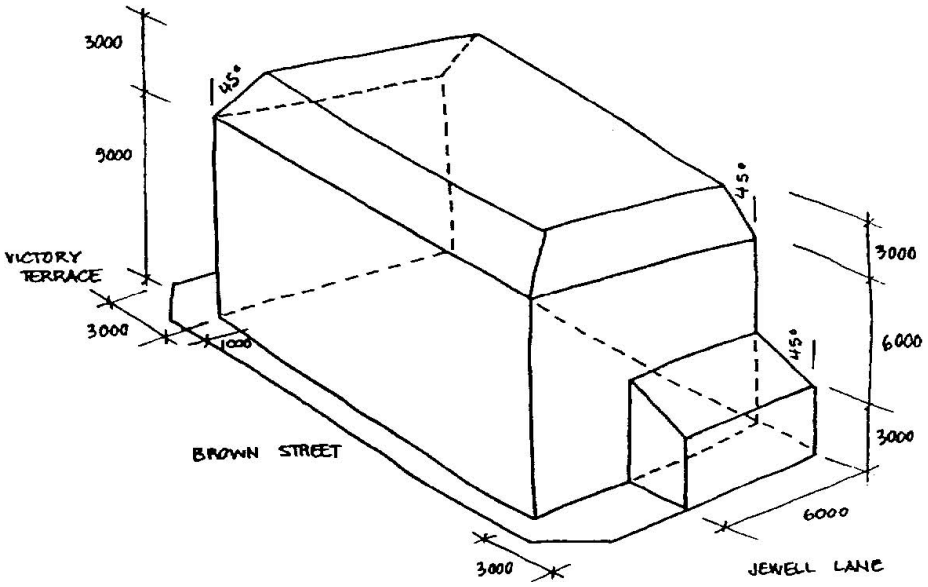

Figure 6 - Building Envelope for Lot 33.

7.0 BUILDING DESIGN

7.1 Sloping Sites

- It is expected that the slope of sites will be accommodated within the design of dwellings through the use of split levels.
- Impact on Neighbouring Construction.
  - Each dwelling must be designed to prevent structural impact on adjoining lots, and must not cause adjoining owners to compromise the design of their dwellings such that retaining structure is required in excess of that which would otherwise be required.

7.2 Floor levels

- The minimum ground floor to first floor height is 3m.
- The finished floor level of the dwelling adjacent to the Mardalup Park setback line should be no more than 400mm higher than the top of the existing retaining wall.

7.3 Privacy

A high standard of acoustic and visual privacy is expected with particular attention to:

- construction materials and techniques to reduce noise transmission between dwellings;
- site and dwelling layout to separate potentially conflicting uses;
- balcony and window location and design to avoid overlooking neighbouring windows and private open space;
- building design should contribute to the creation of a safe environment by avoiding the formation of "blind" spaces which cannot be seen from inside the most used rooms.

7.4 Balconies

- The inclusion of balconies to take advantage of views to the water and parkland is encouraged. Balconies can also assist the composition, articulation and visual interest of buildings. They should be of usable dimensions with a minimum dimension of 1.5m and wherever possible be enhanced by the provision of shading from summer sun.
- Juliette balconies are permitted but will not be counted as private open space. A Juliette balcony is a small balcony with a maximum depth of 750mm.
- A balcony may project into a required minimum setback other than nil setbacks by a maximum of 1 m except on Victory Terrace if the adopted setback is less than 4m.
- Balconies may protrude into the Mardalup Park setback by 1m but if protruded must be 2m deep. If this option is adopted the face of the building may be located 1m behind the setback line.
- A balcony must be set back a minimum of 1m from any adjoining lot. Any balcony set back less than 2m from an adjoining lot must incorporate an approved screen (minimum 1.8m high) on that side.

7.5 Roof Form

- Where it is visible from public areas and streets the majority of the roof pitch is to be between 30 to 45 degrees (sloping away from the public boundary), with a shallower pitch acceptable for verandahs and canopies, small areas of skillion roofs, and small areas of flat roofs where screened behind parapets. The main ridge lines visible from public areas are to be parallel with the public boundary (i.e. they run "across" the lot). Gables are permitted as minor roof elements.
- The use of dormer/attic windows, verandahs and awnings is encouraged to reduce the apparent scale of development, add visual interest and assist with climate control.
- The heights and levels of roof ridges, pitching points, gutters, eaves and parapets must either match those on the adjoining property or vary by a minimum of 600mm.
- Roofs sharing the same pitching point as the adjoining property and in the same plane should match the roof pitch of the adjoining property.

7.6 Articulation, Detailing and Street Presence

- Each dwelling is to be designed as a separate visual entity from its neighbours. This is achieved through the use of contrasting colours, materials and/or textures.
- Buildings are expected to address all public frontages. Jewell Lane is to be treated as an address rather than as a service lane.
- Dwellings are to be orientated towards public spaces.
- The plan layout should enable casual surveillance of the lot and surrounds from habitable rooms and balconies.
- Buildings should provide a modulated street frontage with an articulated facade and use of elements such as verandahs, balconies, awnings, dormers and window projections to provide visual interest and establish a fine grained scale to development.
- Generally detailing should provide visual richness and variety, interest and identity and assist in reducing the visual bulk of building mass.

- Buildings on corner lots are to address both frontages, with special treatment encouraged to mark corners and link streets e.g. additional floor height, distinct roof form, articulation of corner wall elements, variation in materials and colours, special balcony treatments. Extra height at corners through the use of decorative parapets, tower elements or similar is encouraged. In approved instances a "tower element" may take the form of an additional storey if the local government is satisfied that it contributes to the landmark quality of the building.
- Garages (particularly doors), carports and fencing are to be detailed so as to reduce their visual impact and add interest at the pedestrian level.

7.7 Windows

- Overall window opening proportion must be vertical or square. Horizontally proportioned window openings are acceptable only if integral to the elevation and a minor element of the overall elevational composition.
- All main rooms must have at least one opening window to facilitate natural ventilation. Door and window shutters, if fitted, must be operable.

7.8 Chimneys

Chimneys are encouraged. Chimneys should have cowls or contain some shape and form to the chimney capping.

7.9 Balustrades

Metal is preferred over other materials for balustrades. Aluminium or cast iron “lace” is not permitted.

7.10 Blank Walls

- Blank walls abutting or facing public spaces are to be kept to a minimum. Walls are to be detailed to provide visual interest and pedestrian scale.
- Parapet walls up to 6m in height are permitted. Higher parapet walls are permitted where they are hidden from view by a parapet wall on the adjoining lot. Where exposed, parapet walls are to be detailed to the local government’s satisfaction.

8.0 ACCESS AND PARKING

- No direct pedestrian access is permitted from lots into Mardalup Park or the pedestrian accessways.
- Pedestrian access to lots is to be provided separate from vehicle access. Pedestrian access for Lots 26 to 33 may be provided from Jewell Lane and/or Victory Terrace.
- All vehicular access is to be from Jewell Lane.
- Vehicle parking in front of the building setback line must not exceed 6m in width for each lot. Carports or garages designed to integrate with the design of the dwelling and having good presentation to the street are permitted. Preference will be given to designs which minimise the visual prominence of vehicle parking on the elevation of the building.
- Vehicle parking transition ramps if required must be accommodated within the property boundary.
- Vehicle crossovers, where required, are to be constructed to the local government’s specifications at the developer's expense.

9.0 OPEN SPACE

- North facing private open space should be provided wherever possible.
- Each dwelling must have access to ground level private open space with a minimum dimension of 4m, directly accessible from a living area.
- At least 75% of this ground level open space must be open to the sky. Any overhanging eave, balcony, deck or terrace must not protrude over the north side of the open space or more than 1.5m over any other side and must have a minimum clearance of 3m above the finished ground level of the open space.
- Additional private open space is encouraged. Balconies, decks and roof terraces are all acceptable forms of private open space.
- Roof terraces greater than 4m x 4m in dimension must have a pitched roof or shade structure covering the majority of the terrace, in keeping with the scale and elevation of the dwelling. This is in order to add visual interest, reduce apparent scale and assist with climate control.
- All private open space is to be of area and dimension. As a guide, ground level private open space should have an area with a minimum dimension of 4m, whilst a balcony should have a minimum dimension of 1.5m.
- All private open space must be designed to minimise overlooking of adjoining properties, provide privacy to users and permit adjoining properties to share available views.

10.0 MATERIALS AND COLOURS

10.1 Walls and Windows

- Generally walls are to be red or terracotta coloured brick or similarly coloured masonry, limestone, or coloured render finish.
- Render may be paint finished in ochres, reds and traditional wash colours.
- Timber and lightweight cladding (paint finished or stained) is acceptable on upper floors and as a minor element at ground floor level.
- The considered combination of more than one material or use of more than one finish is encouraged as it adds variety and reduces perceived building bulk.
- Finishes that separate ground and upper floors or parts of upper floors are encouraged.
- Reflective glass or dark tinted glass is not permitted. Generally 6mm float glass is acceptable.

10.2 Colour

- Well considered colour schemes are encouraged, as distinct from predominantly monochrome colour schemes.
- Trim colours which enhance and complement the wall and roof colours are preferred.
- The local government retains the right of final decision on the acceptability of a colour scheme.

10.3 Roofs and Shade Structure Covering

- Roof materials are to be selected from within the following colour range: tiles in autumn or terracotta tones; shingles in slate grey; corrugated metal decking in Colorbond Off White, Merino, Wheat, Birch Grey, Saltbush, Beige, Homestead, Mist Green or Gull Grey, or comparable colours.
- A Zincalume finish is acceptable only where it can be demonstrated that glare and reflectivity will not be a problem to neighbours and surrounding activities, including those on the opposite shore of the river.
- Shade cloth and profiled clear acrylic roof sheeting are not permitted in locations visible from public areas.

11.0 FENCES AND RETAINING WALLS

- Every lot boundary abutting a street, public walkway, park or other public area is to be fenced in a manner compatible with the overall design quality of the area.
- In order to maintain consistency of fencing throughout the subdivision, the standard fencing style depicted in Figure 7 is to be used. This consists of piers to a maximum of 2m high, with a fence base and infill wrought iron or metal railings to a combined maximum of 1.8m high. On boundaries abutting Mardalup Park and public walkways, heights are measured from the top of the existing walls. No fence base in addition to the existing retaining wall is permitted. On other boundaries the heights are measured from the finished ground level of the adjacent street or footpath and piers and maximum 600mm high fence base may be constructed in limestone, face brick or coloured or painted concrete or rendered brick finished to match the dwelling.
- In order to avoid the duplication of piers at boundaries between adjoining properties, piers are to straddle the dividing boundary as shown in Figure 8.
- No fibre cement or similar style fencing is permitted. Dividing fences should be of a style reflecting and compatible with the overall subdivision style.
- At least 50% of the boundary length of street frontage fencing is to contain visually permeable infill panels.
- No retaining walls other than those already provided are permitted on the boundaries abutting public areas. The height of existing retaining walls may not be altered. Designs which minimise the height of retaining walls for dwellings are sought.
- Fencing details are to form part of the application for development approval.
- On boundaries fronting abutting the Mardalup Park limestone piers have already been provided on lot boundaries. Infill is to be provided to the design shown in Figure 9.
- In the setback area adjacent to Mardalup Park, the railings shown on Figure 9 as 700mm in height can be increased in height to be compliant with the relevant Australian Standards and local government requirements for swimming pool fences.
- The infill wrought iron or metal railings comprising the standard fencing to Mardalup Park are to measure 100mm below the top of the existing limestone piers. The dimensions of the vertical intermediate posts as shown on Figure 9 to be 100mm x 100mm x 6mm thick, to the height of the infill railings (i.e. not the dimensions shown on Figure 9).
- Infill panels abutting Mardalup Park are to be black in colour, in order to achieve a consistent appearance from within the park.

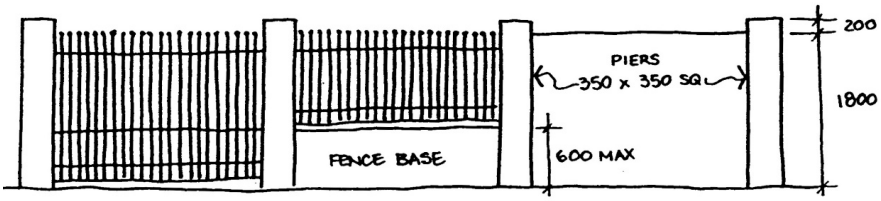

Figure 7 - Standard fencing.

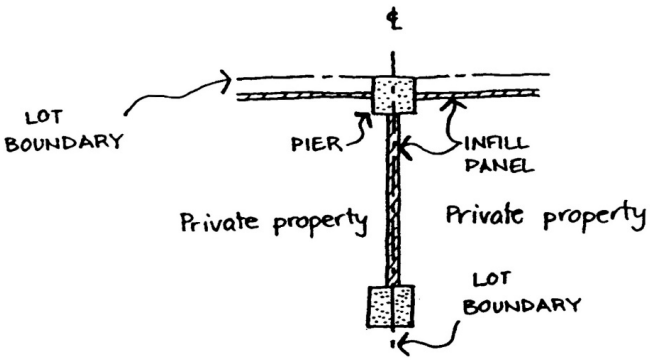

Figure 8 - Fencing on common boundaries.

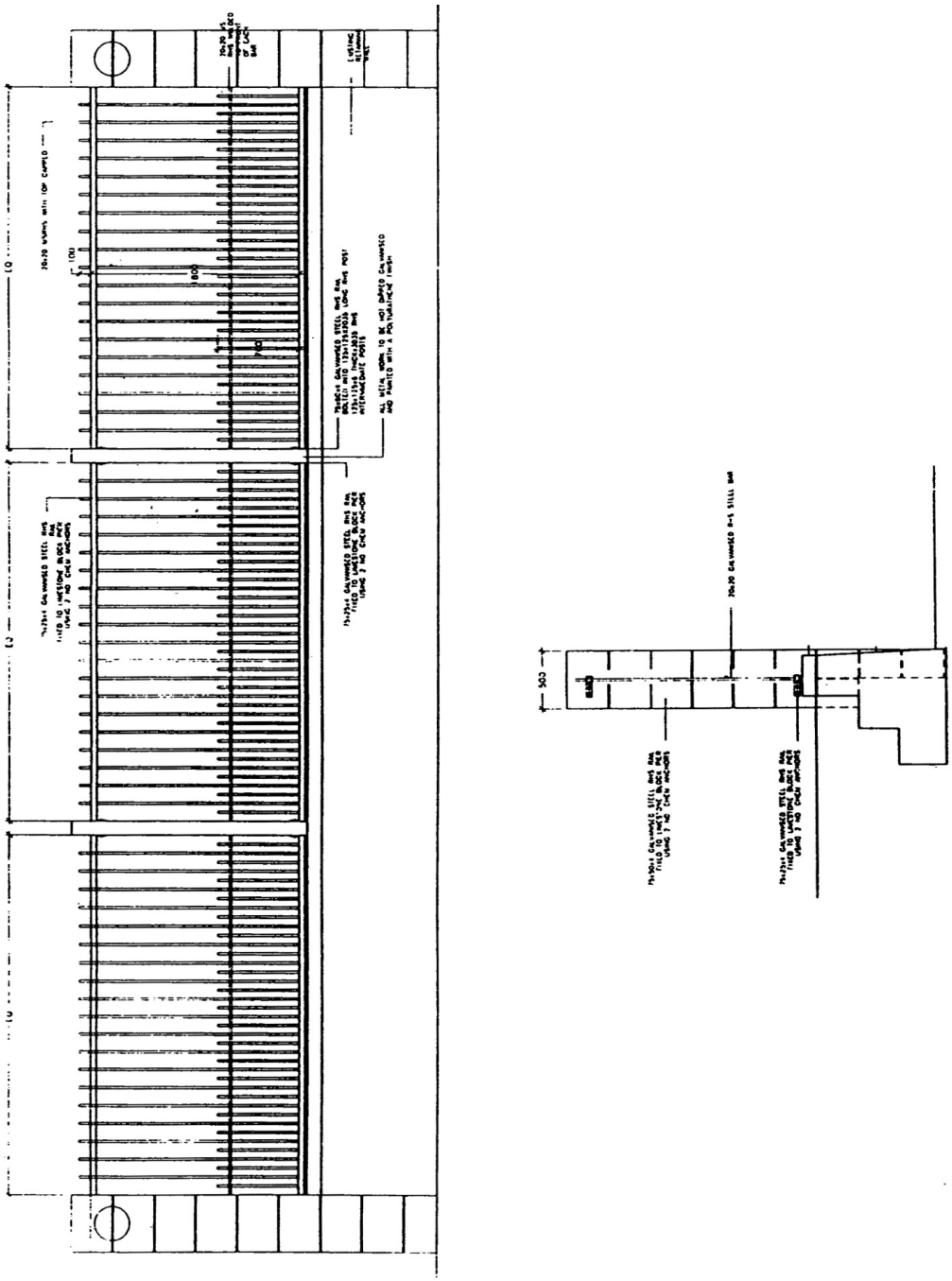

Figure 9 - Fencing facing Mardalup Park.

12.0 LANDSCAPE

- Permeable segmental paving is to be used for all hard surfaces in order to increase on-site water absorption.
- Where paving abuts sealed surfaces in streets or mews and is visible from public areas, its colour, texture and scale should be integrated with the existing paving.
- Trees selected should be suitable for small gardens, and the mature tree size, form and scale should relate to, but not overwhelm the building mass.
- A landscape proposal plan showing general garden layout and location and species of any trees is to be submitted at the time of making a Building License application.
- The careful selection of plants to minimise water consumption requirements is encouraged.
- No groundwater bores are permitted within this subdivision.

13.0 SERVICES

- A service easement area is defined for each lot and all meters and connections are located within it. All such fittings are to be integrated into the overall landscape and building design. Building over these easements is not permitted.
- All piped and wired services, air conditioners, clothes drying areas and hot water storage tanks are to be concealed from street and public area view. Solar panels and solar water heaters may be visible where they are in the same plane as the roof and there is no alternative location that can provide a similar level of solar efficiency.
- Television antennae and satellite and microwave dishes are to be located in accordance with the City of Perth's Policy 1.15. One antennae and one dish per dwelling may be permitted. Antennae and dishes located on the apex or ridges of roofs will not be supported.
- A Stormwater Drainage Plan is to be provided with all building license applications. A stormwater connection pit is provided near the Jewell Lane frontage of each lot and all stormwater on this side of the lot is to be discharged to it. Drainage grates are not to be obstructed. On other parts of the site stormwater is to be disposed of on-site.
- Provision is to be made for the storage of domestic bins, screened from public view.

14.0 GEOTECHNICAL SITE CONDITIONS

Owners are advised that geotechnical briefing notes are available for inspection at the local governments offices if required, however it is the responsibility of each owner to ensure that the design of their dwelling and associated structures is suitable for the site conditions of their lot.