Planning Policy Manual – Part 2

Planning Policies and Design Guidelines for Normalised Redevelopment Areas

Section 2.4
East Perth – Area 4
Victory Terrace

DRAFT

PLEASE NOTE: Proposed Amendments Are Shown In Red – pg. 7

Version #	Decision Reference	Synopsis
1	11 March 2008	Adopted
2	17 March 2015	Amended
3	11 April 2017	Amended
4	To be inserted	Amended

CONTENTS

SECTION	TITLE	PAGE
1.0	RESIDENTIAL DESIGN GUIDELINES	3
1.1	Application	3
1.2	Relationship to Planning Scheme and Planning Policies	3
1.3	About These Guidelines	3
2.2	Setbacks	4
3.1	Sloping Sites	10
3.2	Impact on Neighbouring Construction	10
3.3	Floor levels	10
3.4	Privacy	10
3.5	Balconies	10
3.6	Roof Form	11
3.7	Articulation, Detailing and Street Presence	11
3.8	Windows	11
3.9	Chimneys	12
3.10	Balustrades	12
3.11	Blank Walls	12
3.12	Access and Parking	12
3.13	Open Space	13
4.0	MATERIALS AND COLOURS	13
4.1	Walls and Windows	13
4.2	Colour	14
4.3	Roofs and Shade Structure Covering	14
4.5	Landscape	15
4.6	Services	15
4.7	Geotechnical Site Conditions	16

1.0 RESIDENTIAL DESIGN GUIDELINES

1.1 Application

The Belvidere subdivision is within the Belvidere Precinct (EP 8), as defined in the City of Perth Local Planning Scheme No. 26 (Normalised Redevelopment Areas) (herein called 'the Scheme'). These Guidelines apply to Lots 37 to 44 inclusive as shown in Figure 1.

1.2 Relationship to Planning Scheme and Planning Policies

These Design Guidelines are intended to supplement the provisions of the Scheme and should be read in conjunction the Scheme, in particular those provisions relating to the Claisebrook Village Project Area and Precinct EP8: Belvidere, and other Planning Policies.

The Deemed Provisions set out in the *Planning and Development (Local Planning Schemes) Regulations 2015* also form part of the Scheme Text.

The Scheme Text identifies Preferred, Contemplated and Prohibited uses for Precinct EP8: Belvidere and stipulates maximum plot ratio. In determining any application for development approval, the local government will have regard to these Design Guidelines, the Scheme and other Planning Policies.

1.3 About These Guidelines

These guidelines describe the character sought for this area and the design elements required to achieve the required character and form. Although detailed, they allow a considerable amount of design freedom. It should be noted that whilst variations to some elements may be considered, the local government may refuse Development Approval for developments not considered to be in keeping with the intent of these Guidelines. Variations to building heights and setbacks and building envelopes will not be contemplated.

2.0 BUILDING PARAMETERS

2.1 Development Potential

Lot 37 .....Ten dwellings.

Lot 38 .....Nine dwellings.

Lots 39 to 43 .....One dwelling per lot.

Lot 44 .....Two dwellings.

It is noted that Lots 37 and 38 are intended to be developed with separate building/s. In the event that the lots are purchased with the intention of constructing one development across the land, the development should appear as two or more buildings that comply with the guidelines in terms of the specified setback and building envelope requirements. The objective in this regard is to achieve visual separation between buildings for the purpose of 'breaking' the extent of built form across the two larger lots.

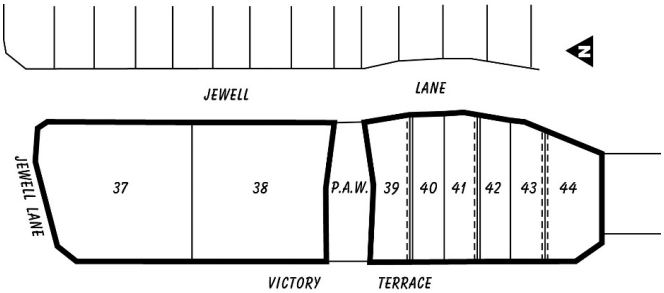

Figure 1 - Lots 37 to 44 Victory Terrace, showing nil setbacks dotted.

2.2 Setbacks

Setbacks are measured at right angles from the relevant boundary to the closest section of wall.

Required setbacks are as follows:

BOUNDARY	MIN	MAX
Lot 37		
Side and North (Jewell Lane)	3m (with minor projections as shown in Figure 2)	n/a
Jewell Lane (East)	3m	n/a
Victory Terrace	3m	4m
Lot 38		
P.A.W.	1m (see Note 1)	4m
Side	3m (with minor projections as shown in Figure 2)	n/a
Jewell Lane	3m	n/a
Victory Terrace	3m	4m
Lot 39		
P.A.W.	1m (see Note 1)	4m
South	Nil	Nil
Jewell Lane	3m (see Note 2)	5m
Victory Terrace	3m	4m
Lots 40 and 42		
Side	Nil	See Note 3
Jewell Lane	3m (see Note 2)	5m
Victory Terrace	3m	4m
Lots 41		
Side	Nil	See Note 3
Jewell Lane	3m (see Note 2)	5m
Victory Terrace	3m	4m
Lots 43		
Side	Nil	See Note 3
Jewell Lane	3m (see Note 2)	5m
Victory Terrace	3m	4m
Lot 44		
P.A.W.	1m (see Note 4)	4m
North	Nil	Nil
Jewell Lane	3m (see Note 2)	5m
Victory Terrace	3m	4m

For the purpose of maintaining the traditional relationship of residences to street and consistency in terms of streetscape appearance, the main walls of street elevations and the front of garage or carport structures on Lots 39 to 44 are required to be at right angles to the side boundaries of the lots (within the confines of the required setback distances and the building envelope). In addition, walls of street elevations should be setback the same distance as those on adjoining lots, or vary within the confines of the permitted setback distances by a minimum of 500 mm (refer Figure 3).

Note 1: For Lots 38 and 39, one section of dwelling/building not less than 8m or more than 12m long must be setback 1m from this boundary. The balance of the dwelling/building must be setback at least 2m.

Note 2: A single storey garage or carport may be constructed with a nil setback to a maximum width of 6m (7m - Lot 44) however, parking must not dominate the street elevation.

Note 3: Maximum nil setback is required for northern boundaries of Lots 40 and 42. Maximum nil setback is required for southern boundaries of Lots 41 and 43 (refer Figure 1). Other side boundaries for these lots may be setback, but if setback, not less than one third of the total depth of the dwelling must be setback 1m. This is to ensure the visual consistency of dwelling spacing. Setbacks between 0 and 1m are not permitted.

Note 4: For Lot 44 (refer Figure 8), one section of dwelling not less than 4m or more than 6m long must be setback 1m from this boundary. The balance of the dwelling must be setback at least 2m.

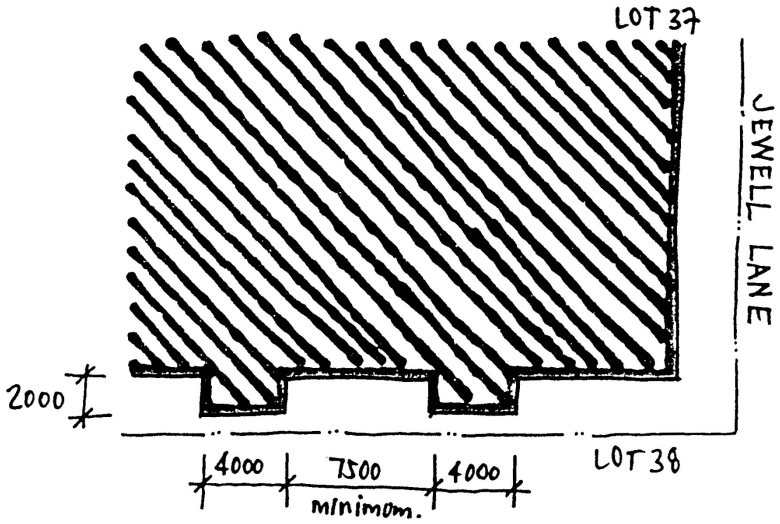

Figure 2 - Permitted intrusion into setback - Lots 37 and 38

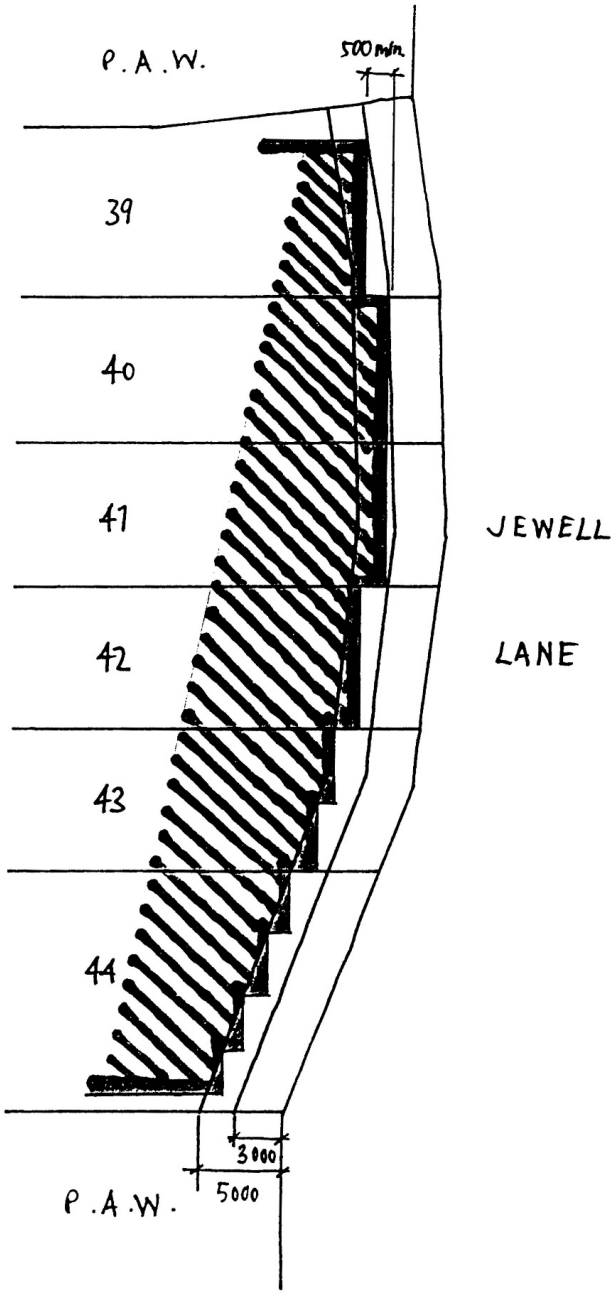

Figure 3 - Jewell Lane Setbacks - Lots 39 to 44

2.3 Building Envelopes and Height

- Building height and bulk is to be contained within the building envelope, with only minor projections allowed for such items as chimneys, finials, pergolas, small portions of bay and dormer windows, Juliette balconies and minor portions of other balconies, and approved features which in the opinion of the local government contribute to the character and identity of the area. Balconies and enclosed rooms must not project past the lot boundaries. The building envelope defines the limits of building bulk and it is not intended that the building profile should mirror that of the envelope.
- The maximum height of the envelope is measured from the highest finished level of the street at the perimeter of the lot.
- Generally building heights are intended to be two to three storeys (up to 9.0 metres) plus usable roof space (3.0m), in the form of a loft, attic or roof terrace. A minimum of two storeys (up to 6.0 metres) is required adjacent to the street frontage of lots. Basement structures are not permitted with the exception of Lots 37 and 38 where basement or undercroft parking is permitted.
- Building envelopes are depicted in Figures 4 to 8 as follows:

  Figure 4: Lot 37
  Figure 5: Lot 38
  Figure 6: Lot 39
  Figure 7: Lots 40 to 43
  Figure 8: Lot 44

- Where the heights specified in this Policy are inconsistent with the heights specified in Special Control Area No. 33 – Royal Perth Hospital Flight Path Protection under City Planning Scheme No. 2, whichever are the lower heights shall apply.
- Allowances should be made for the variations in lot shape between lots when reading these diagrams. If a boundary is comprised of more than one section (ie: there is an angle in the boundary) then the building envelope will have a corresponding number of sections on that boundary.

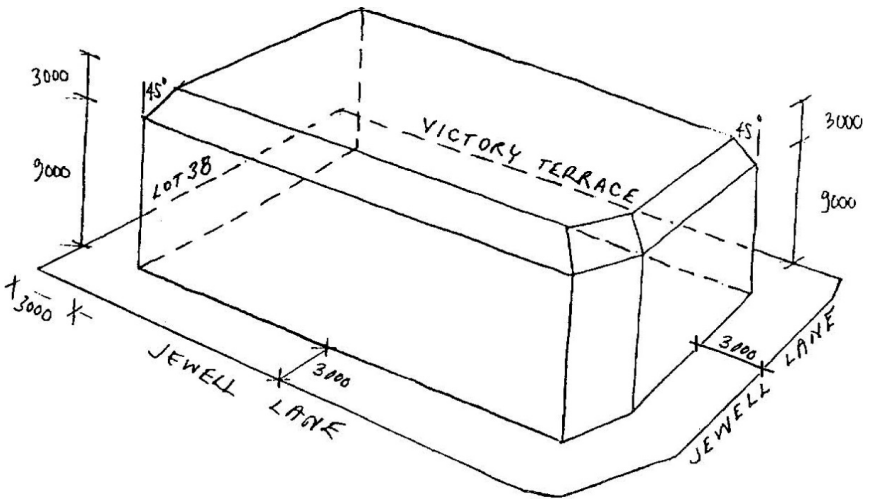

Figure 4 - Building Envelope for Lot 37

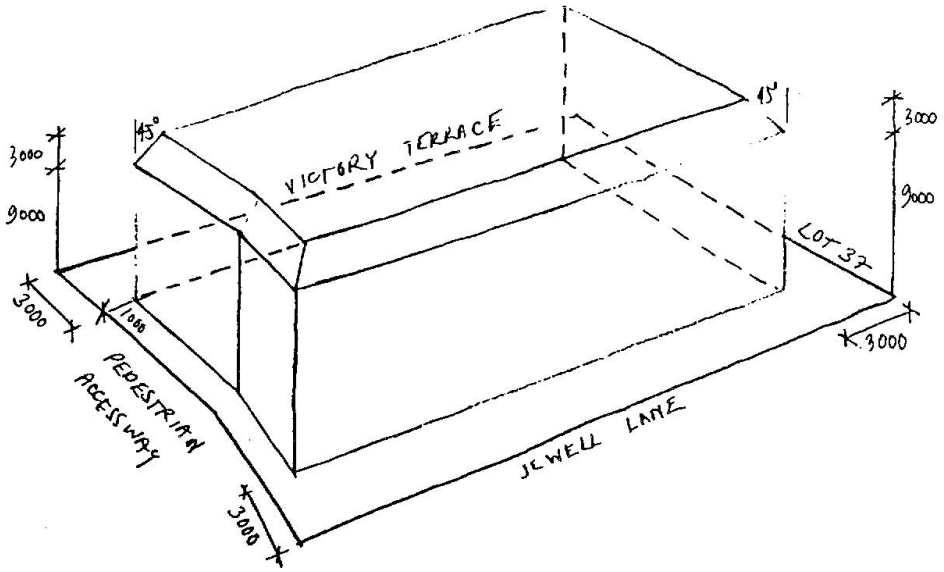

Figure 5 - Building Envelope for Lot 38

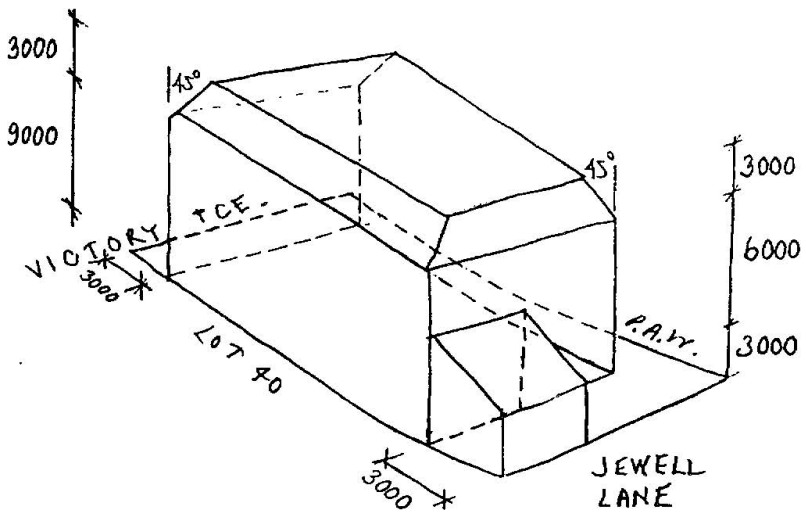

Figure 6 - Building Envelope for Lot 39

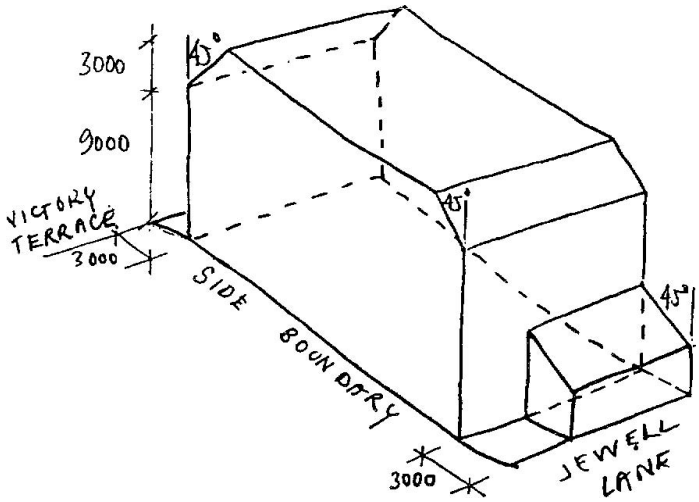

Figure 7 - Building Envelope - Lots 40 and 42. This envelope is mirrored for Lots 41 and 43.

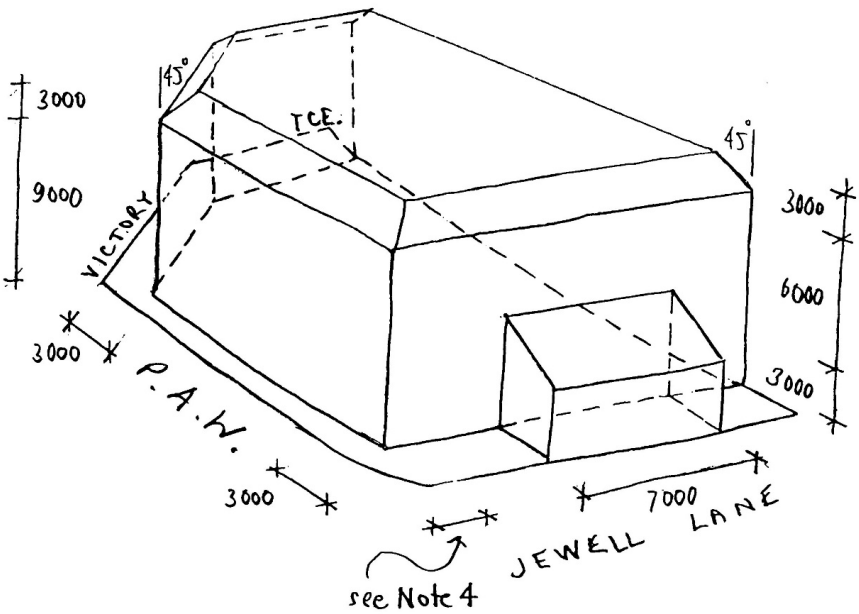

Figure 8 - Building Envelope for Lot 44

3.0 BUILDING DESIGN

3.1 Sloping Sites

It is expected that the slope of sites will be accommodated within the design of dwellings through the use of split levels.

3.2 Impact on Neighbouring Construction

Each dwelling must be designed to prevent structural impact on adjoining lots, and must not cause adjoining owners to compromise the design of their dwellings such that retaining structure is required in excess of that which would otherwise be required.

3.3 Floor levels

The minimum ground floor to first floor height is 3m.

3.4 Privacy

A high standard of acoustic and visual privacy is expected with particular attention to:

- construction materials and techniques to reduce noise transmission between dwellings;
- site and dwelling layout to separate potentially conflicting uses;
- balcony and window location and design to avoid overlooking neighbouring windows and private open space;
- building design should contribute to the creation of a safe environment by avoiding the formation of "blind" spaces which cannot be seen from inside the most used rooms.

3.5 Balconies

- The inclusion of balconies to take advantage of views is encouraged. Balconies can also assist the composition, articulation and visual interest of buildings. They should be of usable dimensions with a minimum dimension of 1.5m and wherever possible be enhanced by the provision of shading from summer sun.
- Juliette balconies are permitted but will not be counted as private open space. A Juliette balcony is a small balcony with a maximum depth of 750mm.
- A balcony may project into a required minimum setback, other than nil setbacks, by a maximum of 1m except on Victory Terrace if the adopted setback is less than 4m.
- A balcony must be set back a minimum of 1 m from any adjoining lot. Any balcony set back less than 2m from an adjoining lot must incorporate an approved screen (minimum 1.8m high) on that side.

3.6 Roof Form

- Where it is visible from public areas and streets, the majority of the roof pitch is to be between 30 to 45 degrees (sloping away from the public boundary), with a shallower pitch acceptable for verandahs and canopies, small areas of skillion roofs, and small areas of flat roofs where screened behind parapets. The use of dormer/attic windows, verandahs and awnings is encouraged to reduce the apparent scale of development, add visual interest and assist with climate control.
- The heights and levels of roof ridges, pitching points, gutters, eaves and parapets must either match those on the adjoining property or vary by a minimum of 600mm.
- Roofs sharing the same pitching point as the adjoining property and in the same plane should match the roof pitch of the adjoining property.

3.7 Articulation, Detailing and Street Presence

- Each dwelling is to be designed as a separate visual entity from its neighbours. This is achieved through the use of contrasting colours, materials and/or textures.
- Buildings are expected to address all public frontages. Jewell Lane is to be treated as an address rather than as a service lane.
- Dwellings are to be orientated towards public spaces.
- The plan layout should enable casual surveillance of the lot and surrounds from habitable rooms and balconies.
- Buildings should provide a modulated street frontage with an articulated facade and use of elements such as verandahs, balconies, awnings, dormers and window projections to provide visual interest and establish a fine grained scale to development.
- Porticos may project into a required minimum setback by up to 750mm.
- Generally, detailing should provide visual richness and variety, interest and identity and assist in reducing the visual bulk of building mass.
- Buildings on corner lots are to address both frontages, with special treatment encouraged to mark corners and link streets e.g. additional floor height, distinct roof form, articulation of corner wall elements, variation in materials and colours, special balcony treatments. Extra height at corners through the use of decorative parapets, tower elements or similar is encouraged. In approved instances, a "tower element" may take the form of an additional storey if the local government is satisfied that it contributes to the landmark quality of the building.
- Garages (particularly doors), carports and fencing are to be detailed so as to reduce their visual impact and add interest at the pedestrian level.

3.8 Windows

- Overall window opening proportion must be vertical or square. Horizontally proportioned window openings are acceptable only if integral to the elevation and a minor element of the overall elevational composition.
- All main rooms must have at least one opening window to facilitate natural ventilation.
- Door and window shutters, if fitted, must be operable.

3.9 Chimneys

Chimneys are encouraged. Chimneys should have cowls or contain some shape and form to the chimney capping.

3.10 Balustrades

Metal is preferred over other materials for balustrades. Aluminium or cast iron "lace" is not permitted.

3.11 Blank Walls

- Blank walls abutting or facing public spaces are to be kept to a minimum. Walls are to be detailed to provide visual interest and pedestrian scale.
- Parapet walls up to 6m in height are permitted. Higher parapet walls are permitted where they are hidden from view by a parapet wall on the adjoining lot. Where exposed, parapet walls are to be detailed and finished to the local government's satisfaction.

3.12 Access and Parking

- Vehicle crossovers, where required, are to be constructed to the local government's specifications at the developer's expense.

Lots 37 and 38

- Principal pedestrian access is to be from Victory Terrace. Pedestrian access is also required from Jewell Lane.
- Vehicular access is to be via a double crossover (to a maximum width of 7m) from Jewell Lane (refer Figure 9). The location of vehicular access is to be close to, or south of the centre of the lot for Lot 37, and in the centre of the lot or north of the centre for Lot 38.

Lots 39 to 43

- Pedestrian access is to be provided separate from vehicle access and is to be from both Victory Terrace and Jewell Lane. Vehicular access is to be from Jewell Lane in accordance with the parking locations shown in Figure 9.
- Vehicle parking in front of the building setback line must not exceed 6m in width for each lot. Carports or garages designed to integrate with the design of the dwelling and having good presentation to the street are permitted. Preference will be given to designs which minimise the visual prominence of vehicle parking on the elevation of the building.

Lot 44

- Pedestrian access is to be provided separate from vehicle access and is to be from both Victory Terrace and Jewell Lane. Vehicular access is to be from Jewell Lane.
- Although Lot 44 has development potential for two dwellings, only one single width crossover will be permitted for each dwelling in the location shown in Figure 9 (maximum combined garage width 7m). If it is intended to provide two car spaces for each dwelling, then both spaces must be able to be served from the single crossover without further modification to the public domain, for example by providing the bays in a "tandem" configuration.

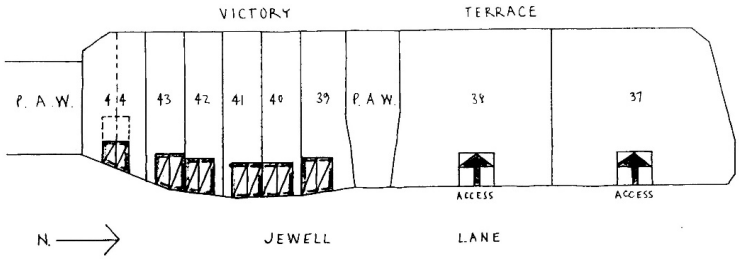

Figure 9 - On-Site Parking Location and Access Lot 37 to 44

3.13 Open Space

- All private open space is to be of usable area and dimension, and where possible should have a northern aspect.
- All dwellings other than apartments must have access to ground level open space with a minimum dimension of 4m and directly accessible from a living area. The opportunity exists on Lots 39 to 43 to create a central courtyard for the purpose of private open space, light access and ventilation.
- At least 75% of ground level open space must be open to the sky. Any overhanging eave, balcony, deck or terrace must not protrude over the north side of the open space or more than 1.5m over any other side and must have a minimum clearance of 3m above the finished ground level of the open space. The provision of additional private open space is encouraged. This may be provided as a balcony, deck or roof terrace. Balconies must have a minimum dimension of 1.5m.
- Roof terraces greater than 4m x 4m in dimension must have a pitched roof or shade structure covering the majority of the terrace, in keeping with the scale and elevation of the dwelling. This is in order to add visual interest, reduce apparent scale and assist with climate control.
- All private open space must be designed to minimise overlooking of adjoining properties, provide privacy to users and permit adjoining properties to share available views.

4.0 MATERIALS AND COLOURS

4.1 Walls and Windows

- Generally walls are to be red or terracotta coloured brick or similarly coloured masonry, limestone, or rendered finish. Light, cream coloured or imitation limestone bricks are generally not acceptable unless used in conjunction with other permitted wall materials.
- Render may be paint finished in ochres, reds and similar wash colours.
- Timber and lightweight cladding (paint finished or stained) is acceptable on upper floors and as a minor element at ground floor level.
- The considered combination of more than one material or use of more than one finish is encouraged as it adds variety and reduces perceived building bulk. Finishes that separate ground and upper floors or parts of upper floors are encouraged.
- Reflective glass or dark tinted glass is not permitted. Generally 6mm float glass is acceptable.

4.2 Colour

- Well considered colour schemes are encouraged, as distinct from predominantly monochrome colour schemes.
- Trim colours which enhance and complement the wall and roof colours are preferred. The local government retains the right of final decision on the acceptability of a colour scheme.

4.3 Roofs and Shade Structure Covering

- Roof materials are to be selected from within the following colour range: tiles in autumn or terracotta tones; shingles in slate grey; corrugated metal decking in Colorbond Off White, Merino, Wheat, Birch Grey, Saltbush, Beige, Homestead, Mist Green or Gull Grey, or comparable colours.
- A Zincalume finish is acceptable only where it can be demonstrated that glare and reflectivity will not be a problem to neighbours and surrounding activities, including those on the opposite shore of the river. Shadecloth and profiled clear acrylic roof sheeting are not permitted in locations visible from public areas.

4.4 Fences and Retaining Walls

- Every lot boundary abutting a street, public walkway, or other public area is to be fenced in a manner compatible with the overall design quality of the area.
- In order to maintain consistency of fencing throughout the subdivision, the standard fencing style depicted in Figure 10 is to be used. This consists of piers to a maximum of 2m high, with a fence base and infill wrought iron or metal railings to a combined maximum of 1.8m high. On boundaries abutting public walkways, heights are measured from the top of the existing walls. No fence base in addition to the existing retaining wall is permitted. On other boundaries, the heights are measured from the finished ground level of the adjacent street or footpath and piers and or maximum 500mm high fence base may be constructed in limestone, face brick or coloured or painted concrete or rendered brick finished to match the dwelling.
- Retaining walls on property boundaries within the public walkways are under the care and control of the local government. Whilst building fences on top of these walls may be desirable therefore (having regard for the design controls mentioned above), the authority to do so is the responsibility of the local government.
- In order to avoid the duplication of piers at boundaries between adjoining properties, piers are to straddle the dividing boundary as shown in Figure 11.
- No fibre cement or similar style fencing is permitted. Dividing fences should be of a style reflecting and compatible with the overall subdivision style.
- At least 50% of the boundary length of street frontage fencing is to contain visually permeable infill panels.
- No retaining walls other than those already provided are permitted on the boundaries abutting public areas. The height of existing retaining walls may not be altered. Designs which minimise the height of retaining walls for dwellings are sought.
- Fencing details are to form part of the application for development approval.

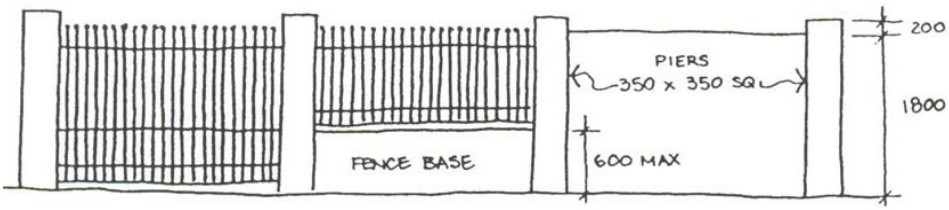

Figure 10 - Standard Fencing

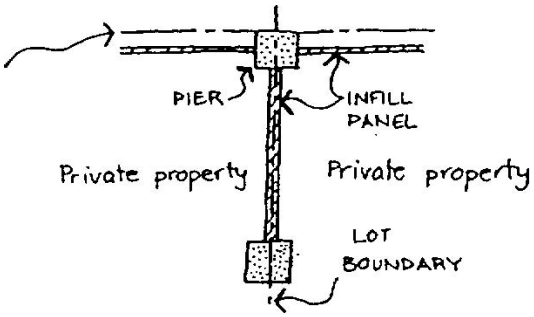

Figure 11 - Fencing on common boundaries

4.5 Landscape

- Permeable segmental paving is to be used for all hard surfaces in order to increase on-site water absorption.
- Where paving abuts sealed surfaces in streets or mews and is visible from public areas, its colour, texture and scale should be integrated with the existing paving.
- Trees selected should be suitable for small gardens, and the mature tree size, form and scale should relate to, but not overwhelm the building mass.
- A landscape proposal plan showing general garden layout and location and species of any trees is to be submitted at the time of making a Building Licence application.
- The careful selection of plants to minimise water consumption requirements is encouraged. No groundwater bores are permitted within this subdivision.

4.6 Services

- A service easement area is defined for each lot and all meters and connections are located within it. All such fittings are to be integrated into the overall landscape and building design. Building over these easements is not permitted.
- All piped and wired services, air conditioners, clothes drying areas and hot water storage tanks are to be concealed from street and public area view. Solar panels and solar water heaters may be visible where they are in the same plane as the roof and there is no alternative location that can provide a similar level of solar efficiency.
- A Stormwater Drainage Plan is to be provided with all building licence applications. A stormwater connection pit is provided near the Jewell Lane frontage of each lot and all stormwater on this side of the lot is to be discharged to it. Drainage grates are not to be obstructed. On other parts of the site stormwater is to be disposed of on-site.

- Provision is to be made for the storage of domestic bins, screened from public view.

4.7 Geotechnical Site Conditions

Owners are advised that geotechnical briefing notes are available for inspection at the local government's offices if required, however it is the responsibility of each owner to ensure that the design of their dwelling and associated structures is suitable for the site conditions of their lot.